PREDATOR

V8 4X4 FLAT PACK BUGGY

FLAT PACK – DIY

PROFORMANCE MOTORSPORT

Build Your Own Flat 4X4 Pack Buggy

PROFORMANCE MOTORSPORT

PREDATOR

Build Your Own Flat 4X4 Pack Buggy

PROFORMANCE MOTORSPORT

PREDATOR

PROFORMANCE MOTORSPORT

PREDATOR

PROFORMANCE MOTORSPORT

PREDATOR

PROFORMANCE MOTORSPORT

PREDATOR

SCORE – BITD – FIA – CAMS – RACE LEGAL CHASSIS

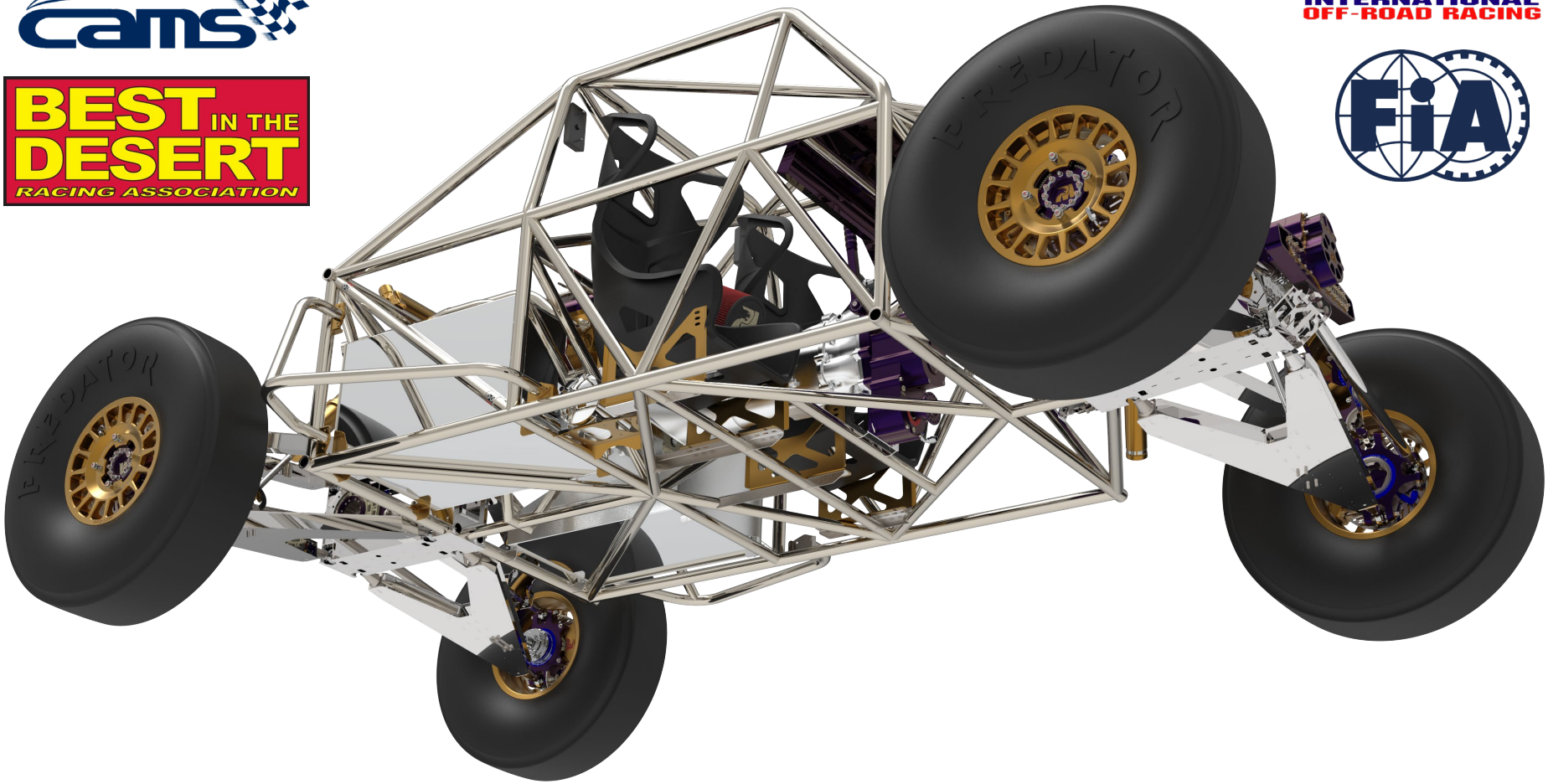

PROFORMANCE MOTORSPORT

PREDATOR

V8 + 6 SPEED SEQUENTIAL + QUICK CHANGE TRANSFER CASE

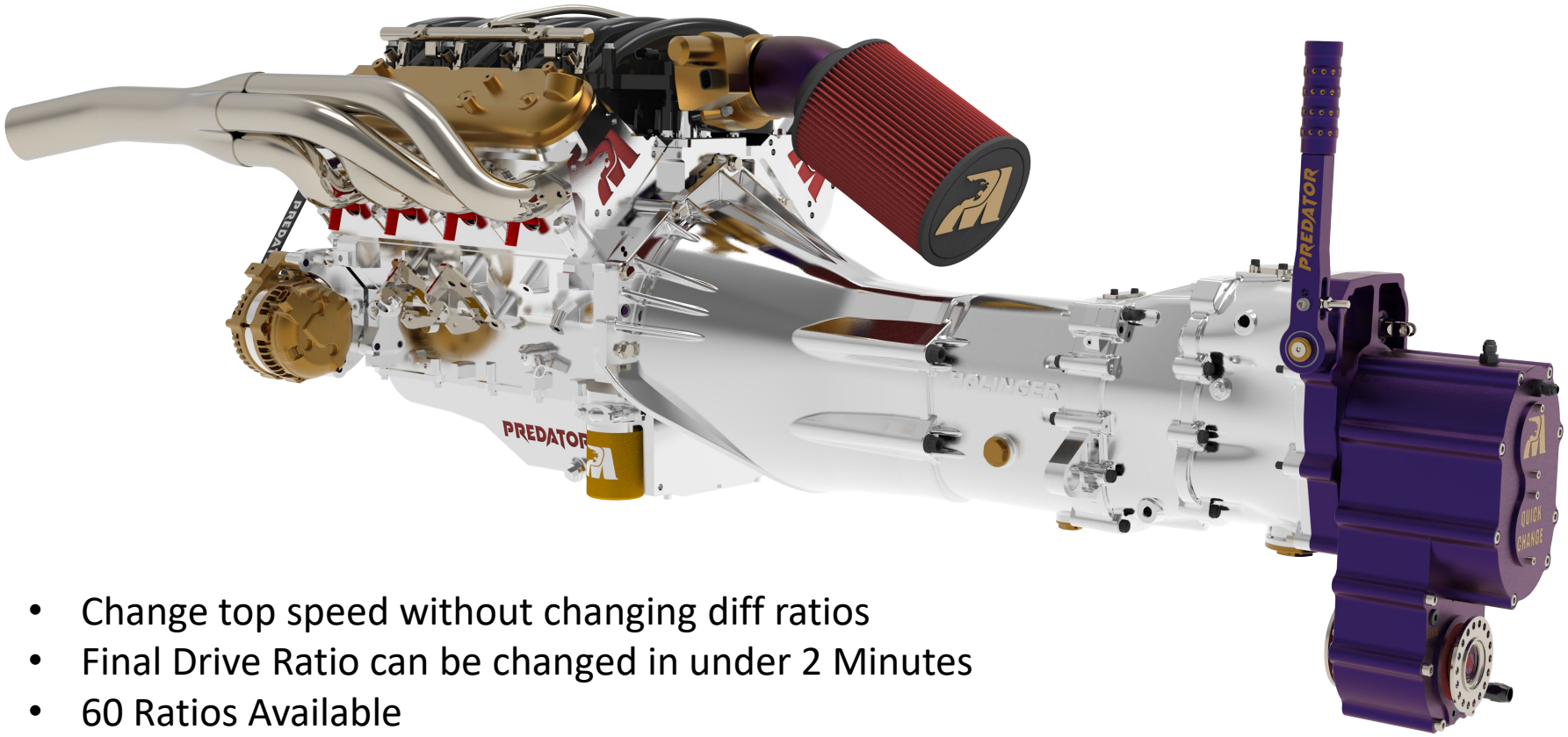

- Change top speed without changing diff ratios
- Final Drive Ratio can be changed in under 2 Minutes
- 60 Ratios Available

PROFORMANCE MOTORSPORT

PREDATOR

HONDA K48 V8 (CONCEPT ENGINE)

(NEUTRON ENGINES)

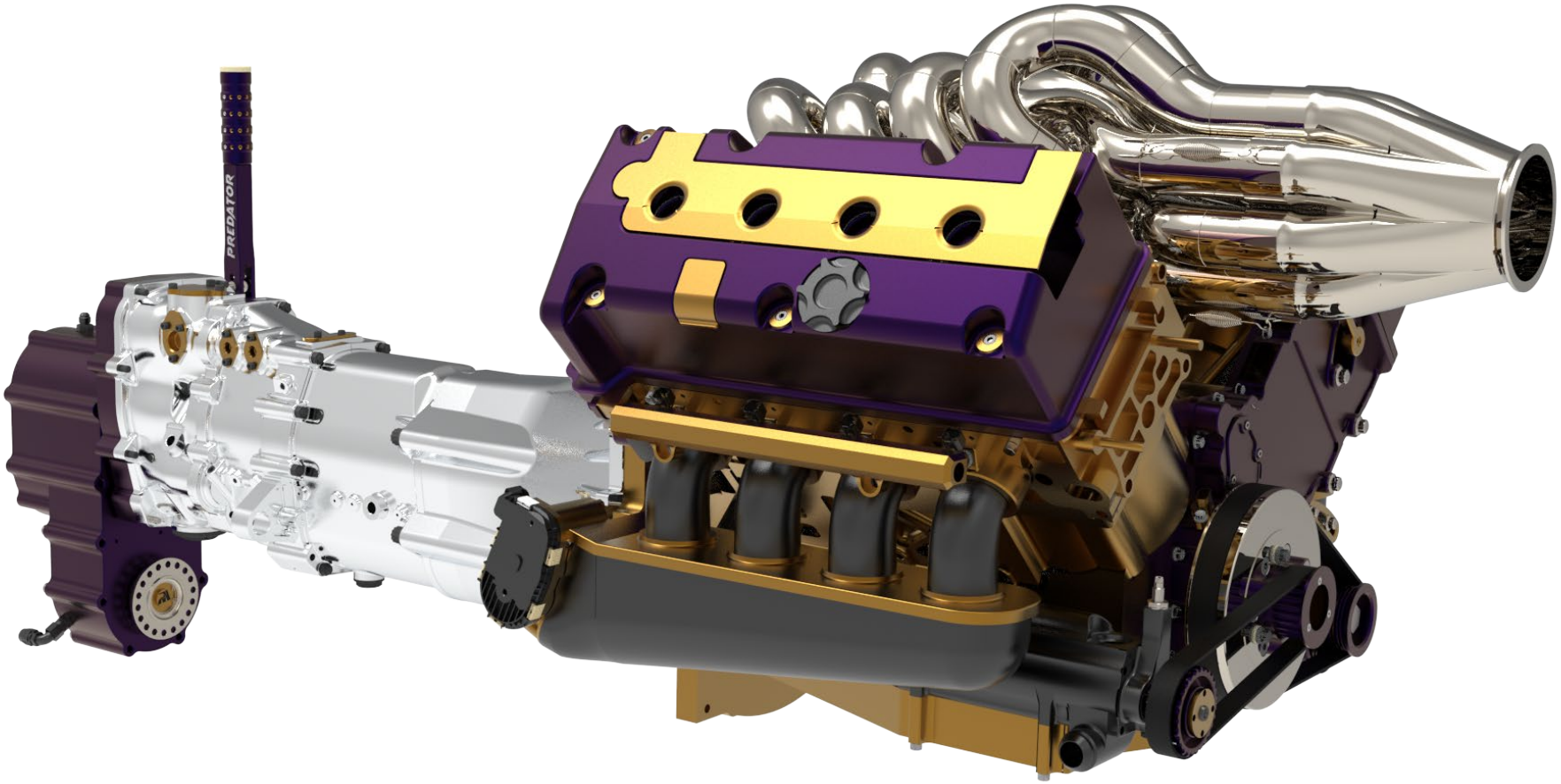

PROFORMANCE MOTORSPORT

PREDATOR

PROFORMANCE MOTORSPORT

PREDATOR

30 INCHES WHEEL TRAVEL – 30 DEGREE STEERING

PROFORMANCE MOTORSPORT

PREDATOR

SYMETRICAL BULKHEADS (FRONT AND REAR)

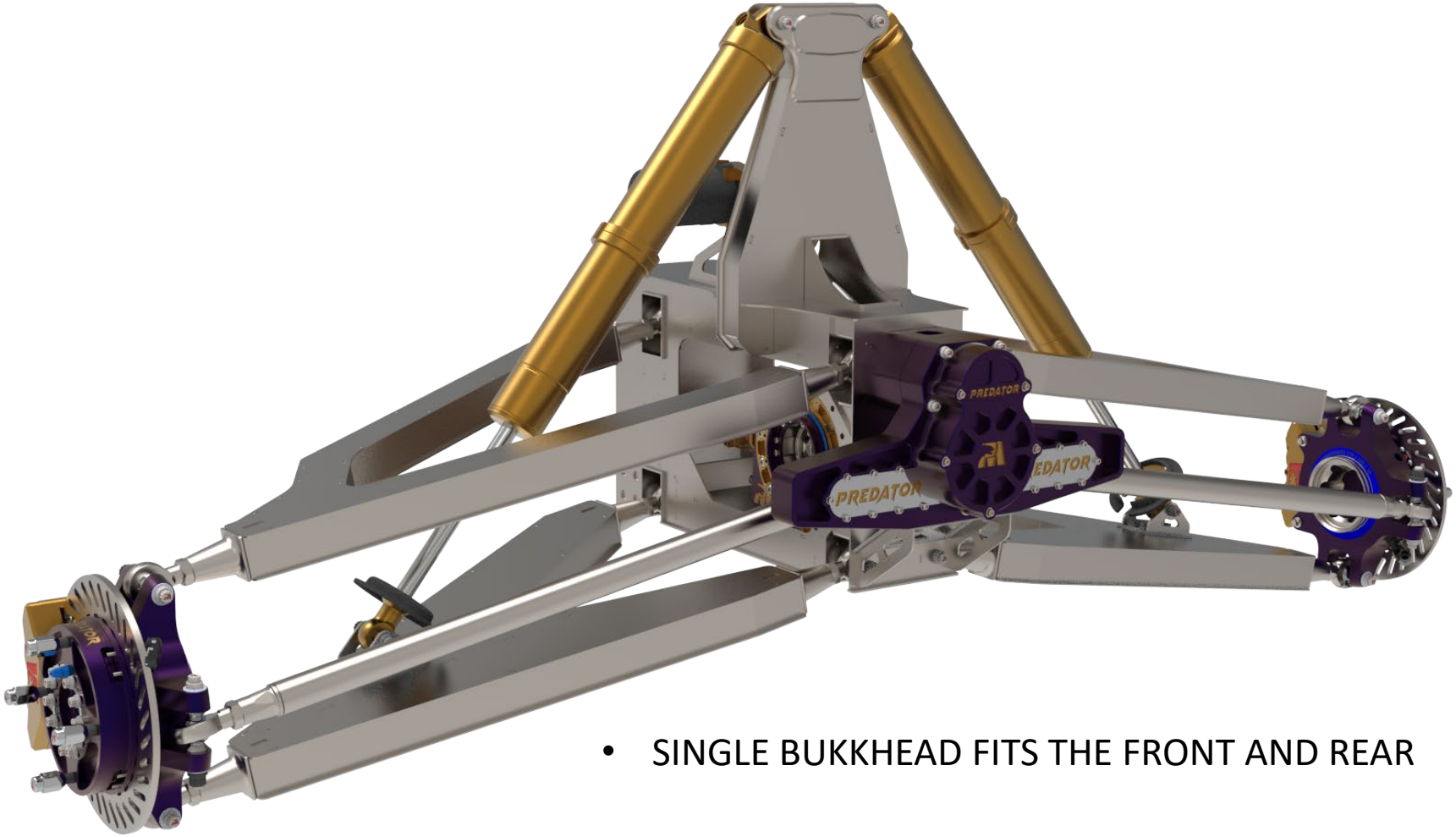

- SINGLE BUKKHEAD FITS THE FRONT AND REAR

PROFORMANCE MOTORSPORT

PREDATOR

SYMETRICAL HUBS – FRONT/BACK/LEFT/RIGHT

PROFORMANCE MOTORSPORT

PREDATOR

ULTRA NARROW DIFFERENTIALS – INTERNAL CV JOINTS

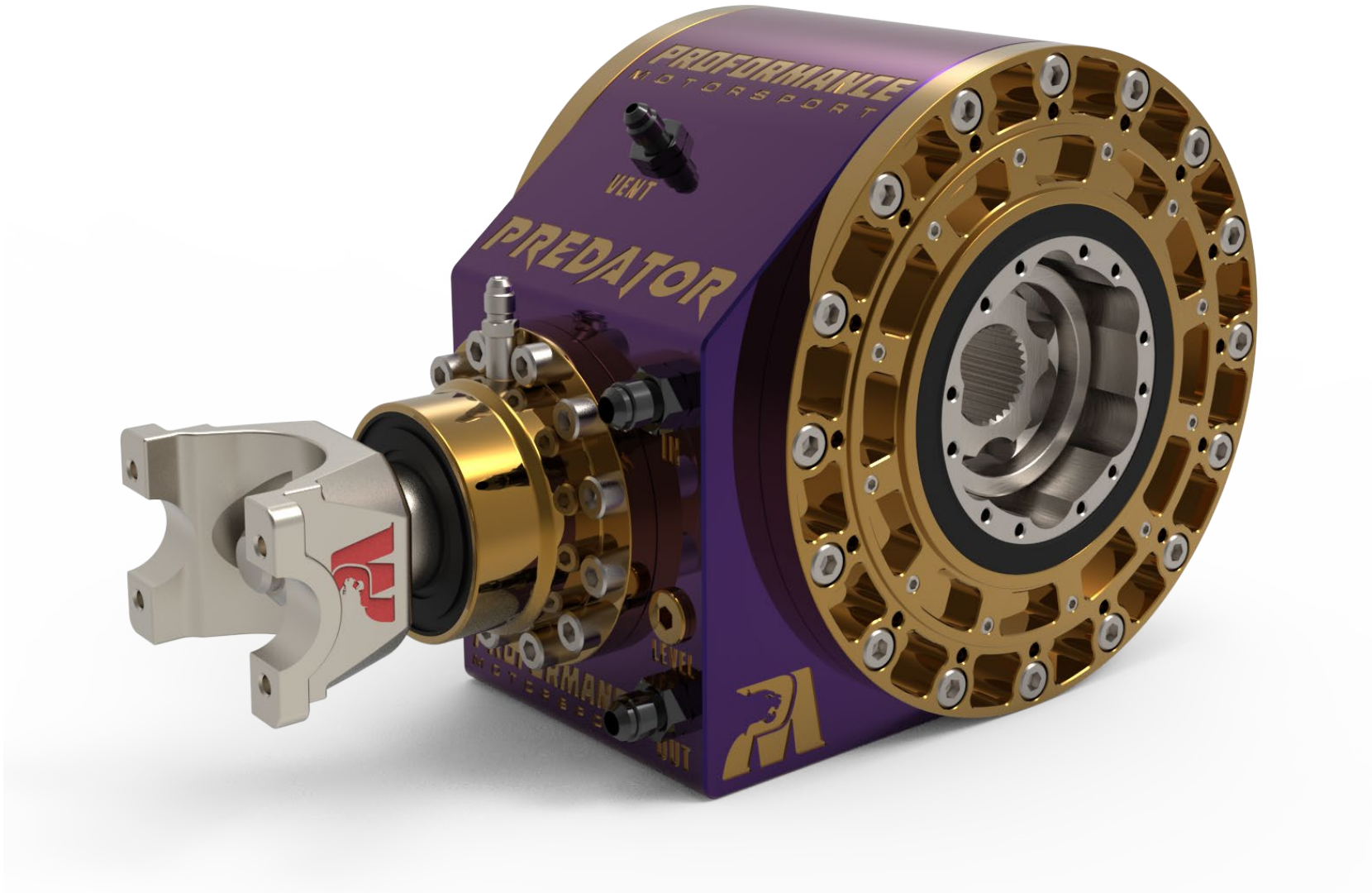

PROFORMANCE MOTORSPORT

PREDATOR

ELECTRIC POWER STEERING RACK

(100% Sealed – Waterproof)

PROFORMANCE MOTORSPORT

PREDATOR

QUICK CHANGE 4X4 TRANSFER CASE

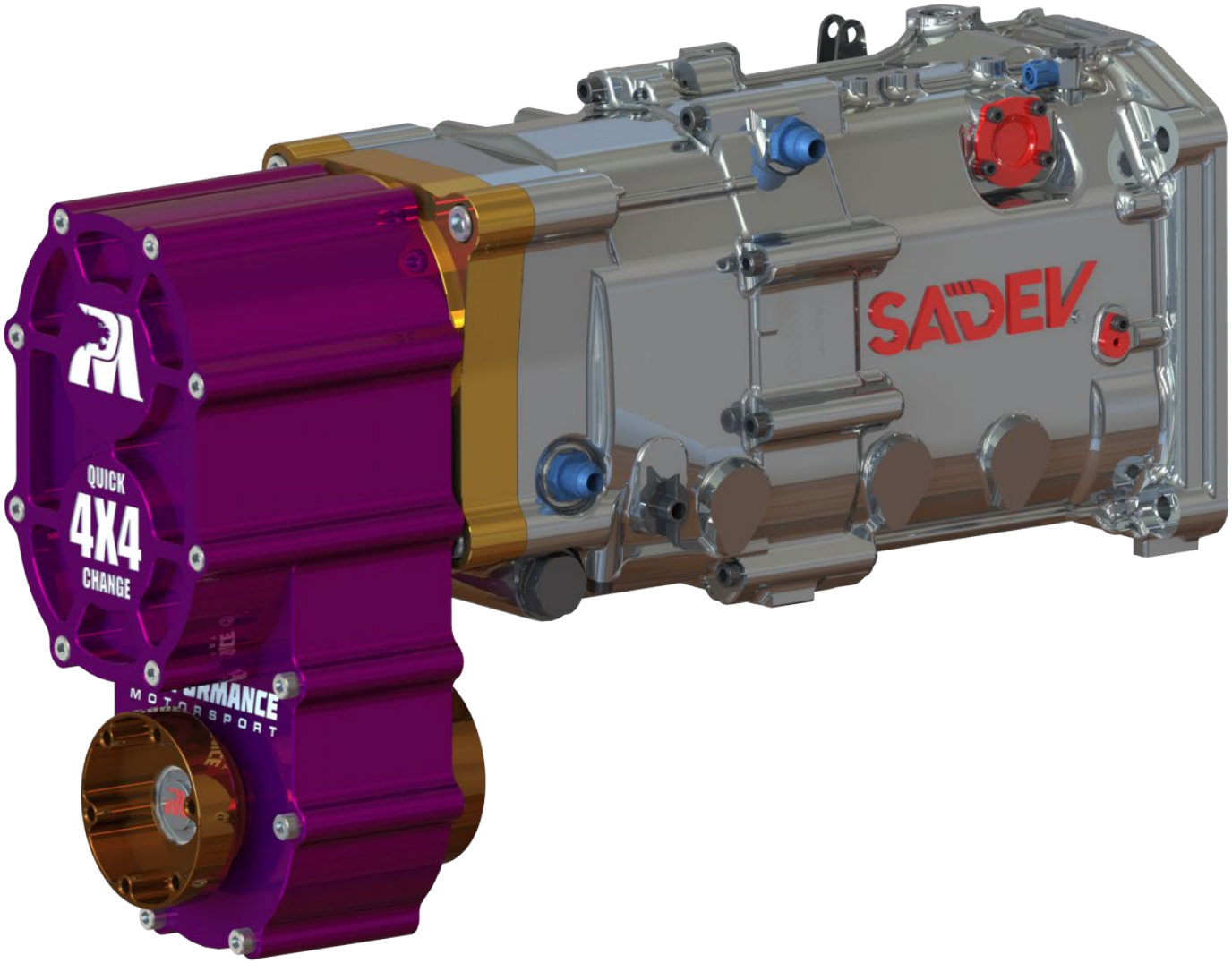

PROFORMANCE MOTORSPORT

PREDATOR

FLAT PACK KITS

PROFORMANCE MOTORSPORT

PREDATOR

FLAT PACK – BUILD YOUR OWN
3D CAD DESIGNED

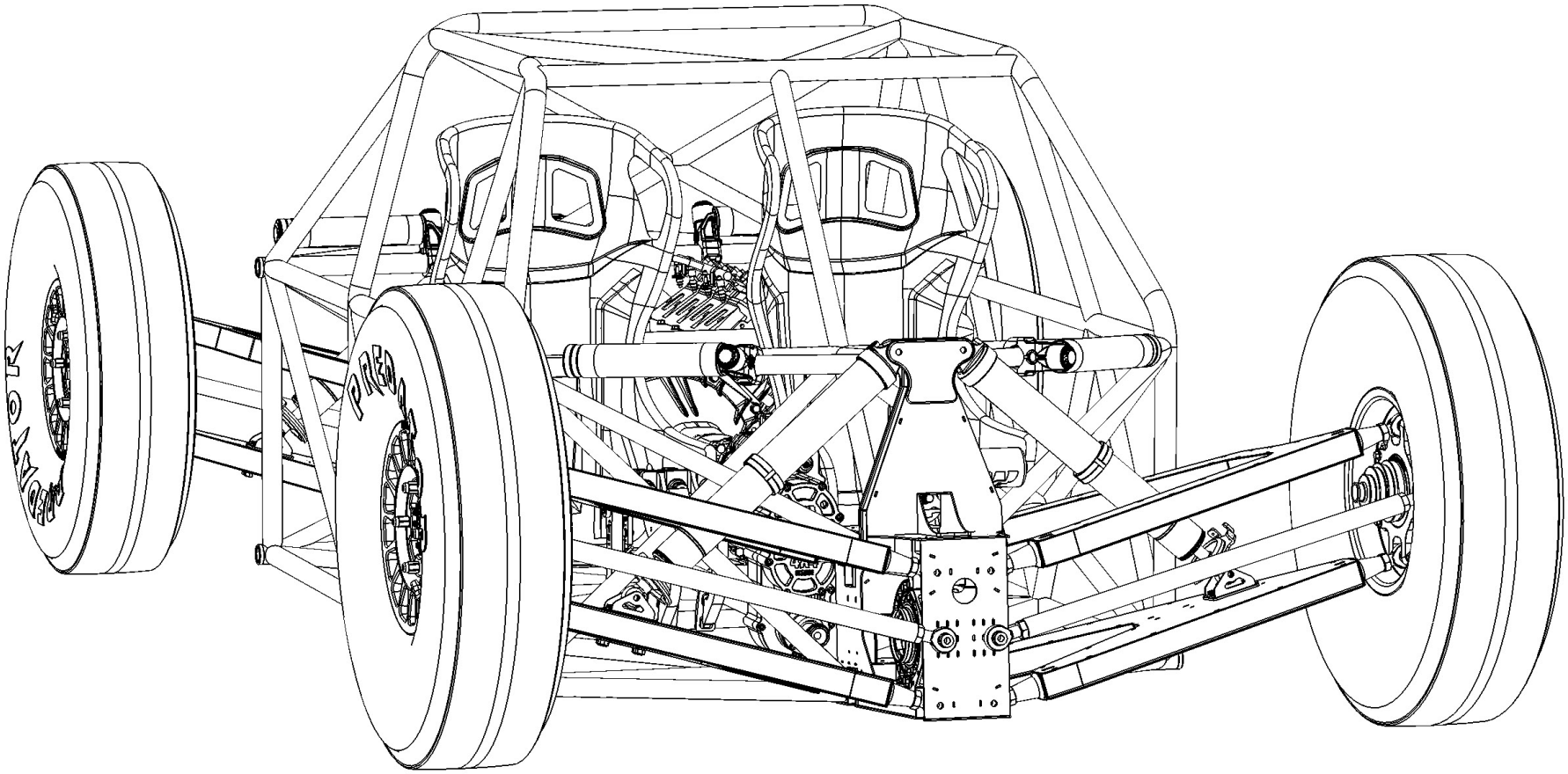

PROFORMANCE MOTORSPORT

PREDATOR

Ultra Light 37” Tires – Ultra Light Wheels

PROFORMANCE MOTORSPORT

PREDATOR

BUILD YOUR OWN ULTRA LIGHT V8 4X4 BUGGY

PROFORMANCE MOTORSPORT

PREDATOR

Electric Brake Booster (3500 PSI)

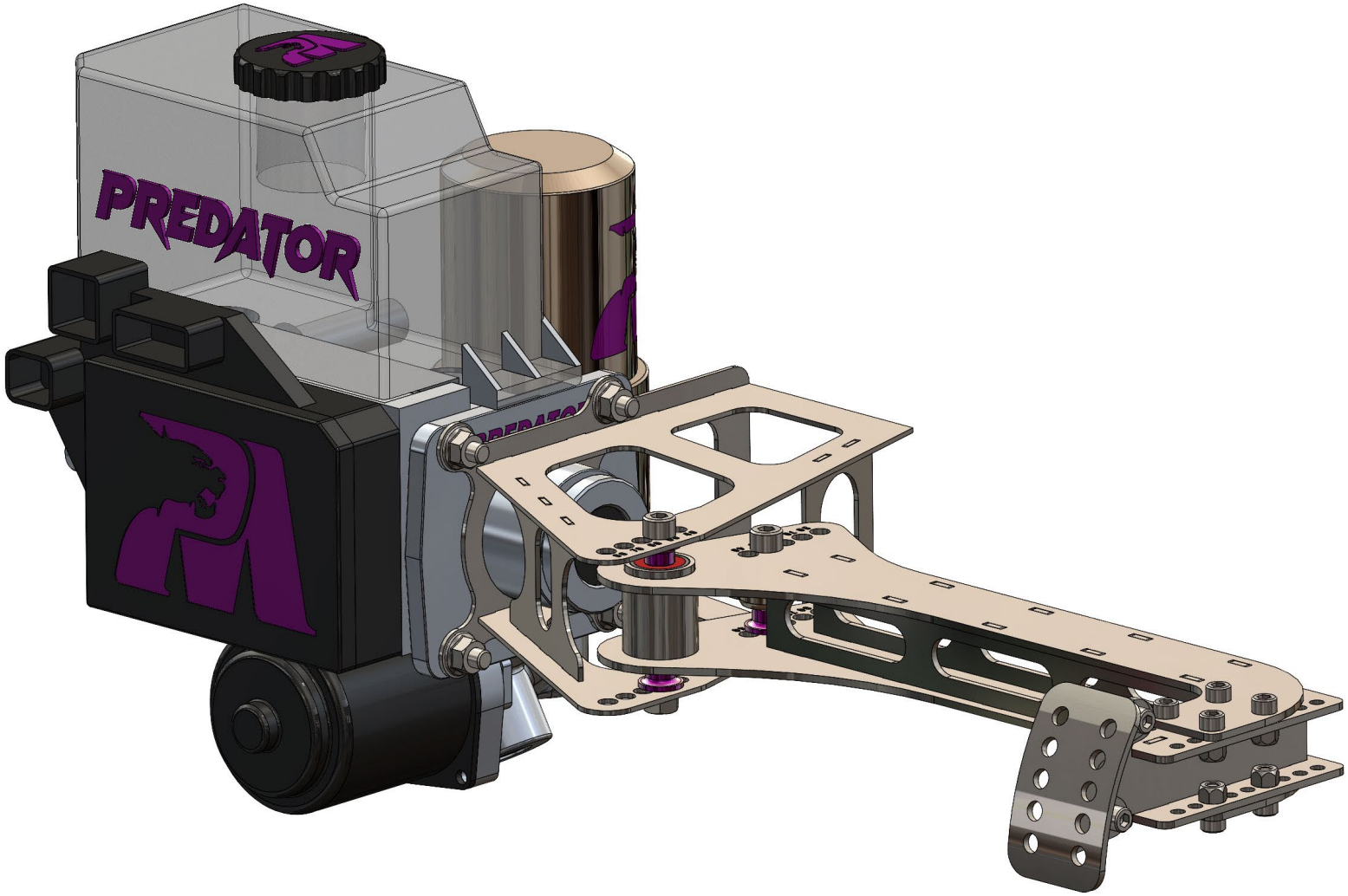

PROFORMANCE MOTORSPORT

PREDATOR

WELD IT – ASSEMBLE IT – DRIVE IT !

PROFORMANCE MOTORSPORT

PREDATOR

THE ULTIMATE 4X4 V8 BUGGY

- Don’t buy a “donor” SXS to get a few “bits” then throw the rest in the bin
- Don’t waste your money on a Toy SXS – Build your own with our DIY Kit
- Reliable Car Engines: 4 Cyl, V6 or V8 – NO RUBBER BELTS !!

PROFORMANCE MOTORSPORT

PREDATOR

FORD/CHEV/TOYOTA
V8, V6, 4 Cyl

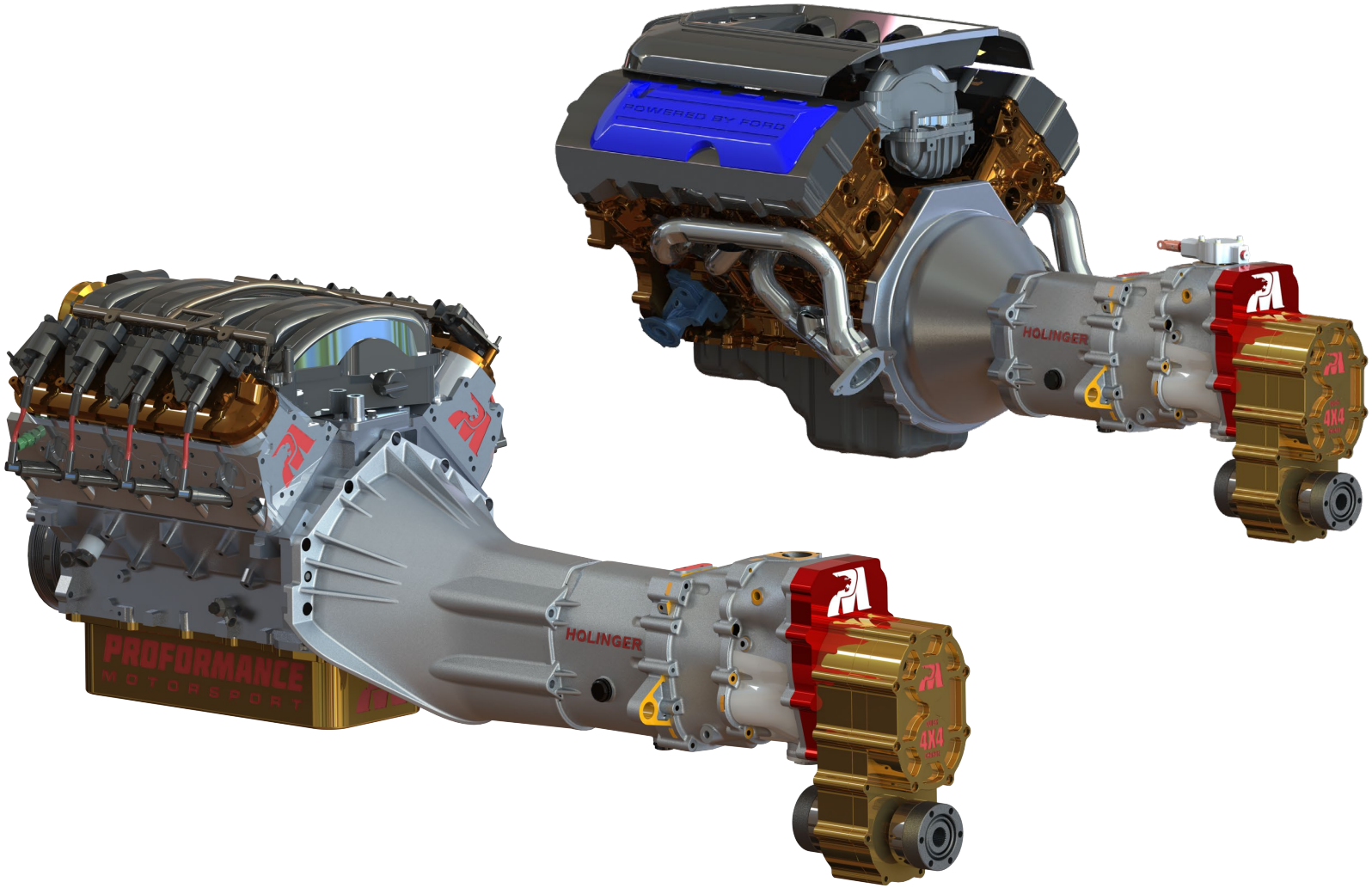

PROFORMANCE MOTORSPORT

PREDATOR

AUTOMATIC TRANSMISSIONS (2023) 6/8 SPEED

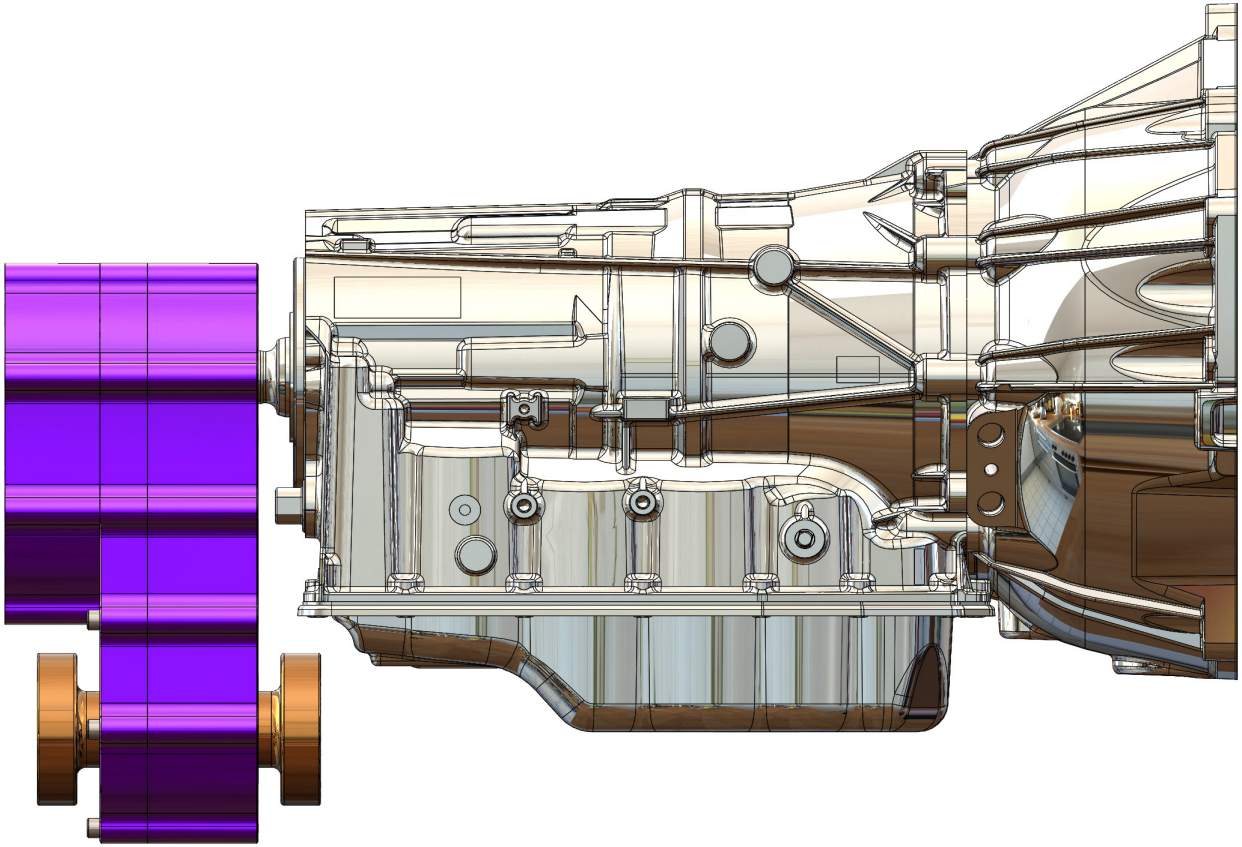

PROFORMANCE MOTORSPORT

PREDATOR

QUICK CHANGE TRANSFER CASE

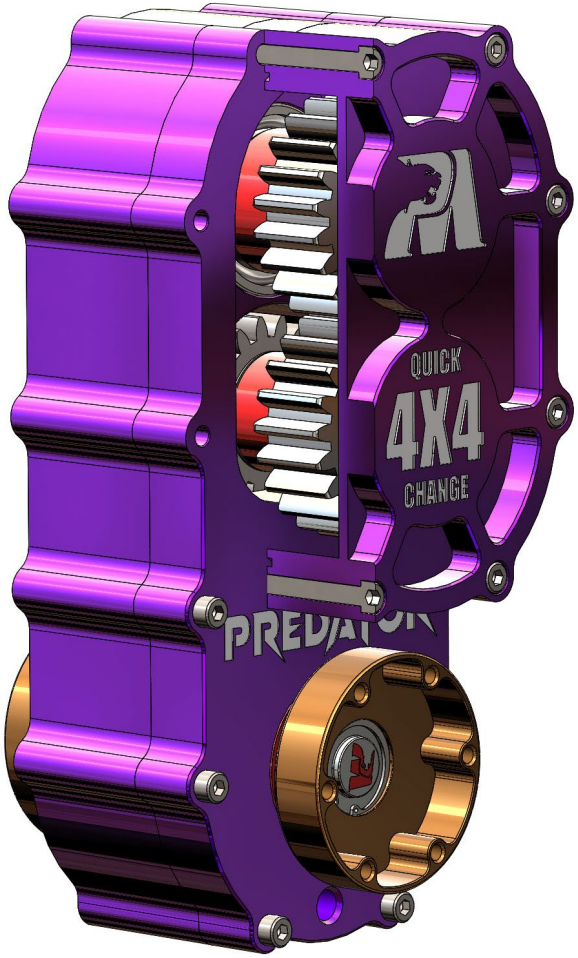

PROFORMANCE MOTORSPORT

PREDATOR

ULTRA NARROW DIFFS – INTERNAL CV JOINTS

PROFORMANCE MOTORSPORT

PREDATOR

ULTRA NARROW DIFFS - INTERNAL CV JOINT

- Massive 6.0” Diff Bearings
- 40 Degree Internal CV Joint
  - Longer Axles
  - More Wheel Travel
  - Less CV Angle
  - Increased Reliability
- Massive 30 Spline CV Star
  - 300% stronger than OEM SXS CV
  - Stronger CV
  - Stronger Axle
  - Less DNF’s

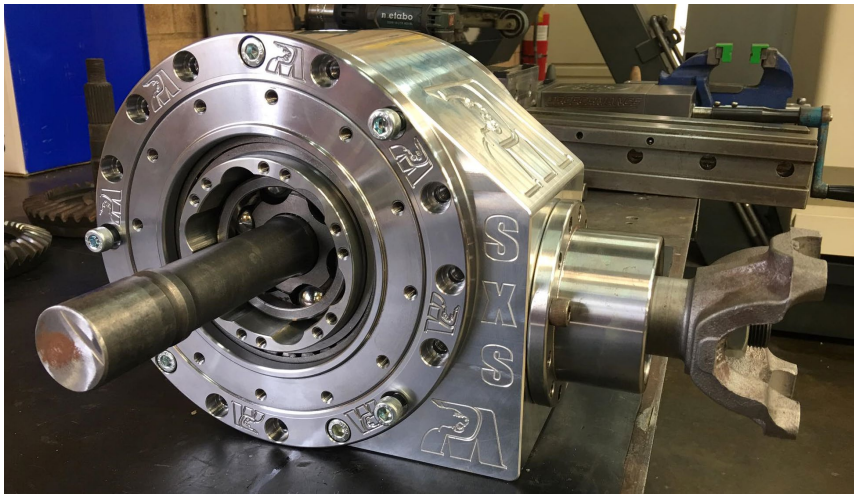

PROFORMANCE MOTORSPORT PREDATOR

40 DEGREE CV – MORE WHEEL TRAVEL

PROFORMANCE MOTORSPORT

PREDATOR

BILLET HUBS - INTERNAL CV JOINT

- Massive 6.0” Wheel Bearings
- No Spline to Break off
- Internal CV Joint
  - Longer Axles
  - More Wheel Travel
  - Less CV Angle
- Massive 30 Spline CV Star
  - 300% stronger than OEM SXS CV
  - Stronger CV
  - Stronger Axle
  - Less DNF’s
- 45 Degree CV Angle
  - More Steering Angle
  - Incredible Handling/Steering

PROFORMANCE MOTORSPORT

PREDATOR

HUBS WITH INTERNAL CV JOINTS – 30” WHEEL TRAVEL

PROFORMANCE MOTORSPORT

PREDATOR

TIRE INFLATION/DEFLATION

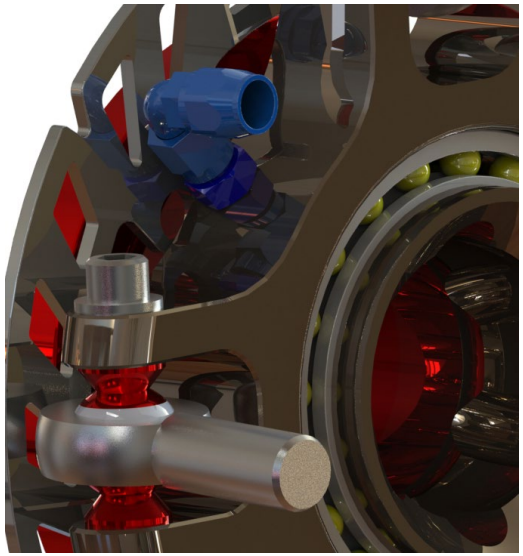

PROFORMANCE MOTORSPORT

PREDATOR

TIRE INFLATION/DEFLATION

- Central Tyre Inflation
- Possible via our SXS Hubs with Internal CV Joints
- Deflate and Inflate whilst driving

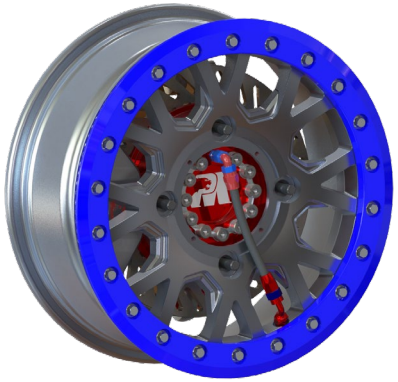

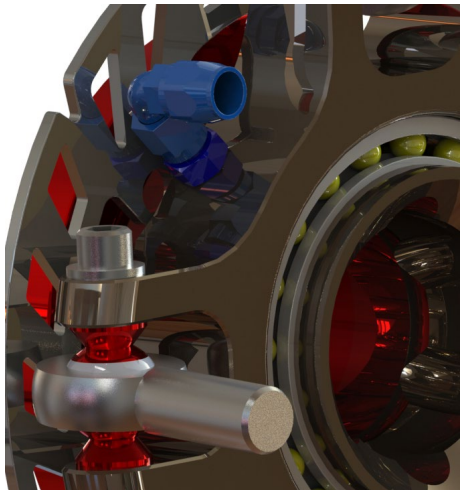

PROFORMANCE MOTORSPORT

PREDATOR

LESS SPARES - ONE HUB FITS ALL 4 CORNERS

- 6061 T6 Aluminium Billet Case
- One Hub fits all 4 corners
  - Single spare part
  - Can carry spare when competing
  - Lower production cost
- Fully Sealed - Twin Oil Seals
  - **Waterproof** IP68 (Submersible)
- 4 Piston Wilwood Race Caliper
  - 290mm S/S ROTOR
  - Floating Rotor
- Double Shear Heim Joint Pivots

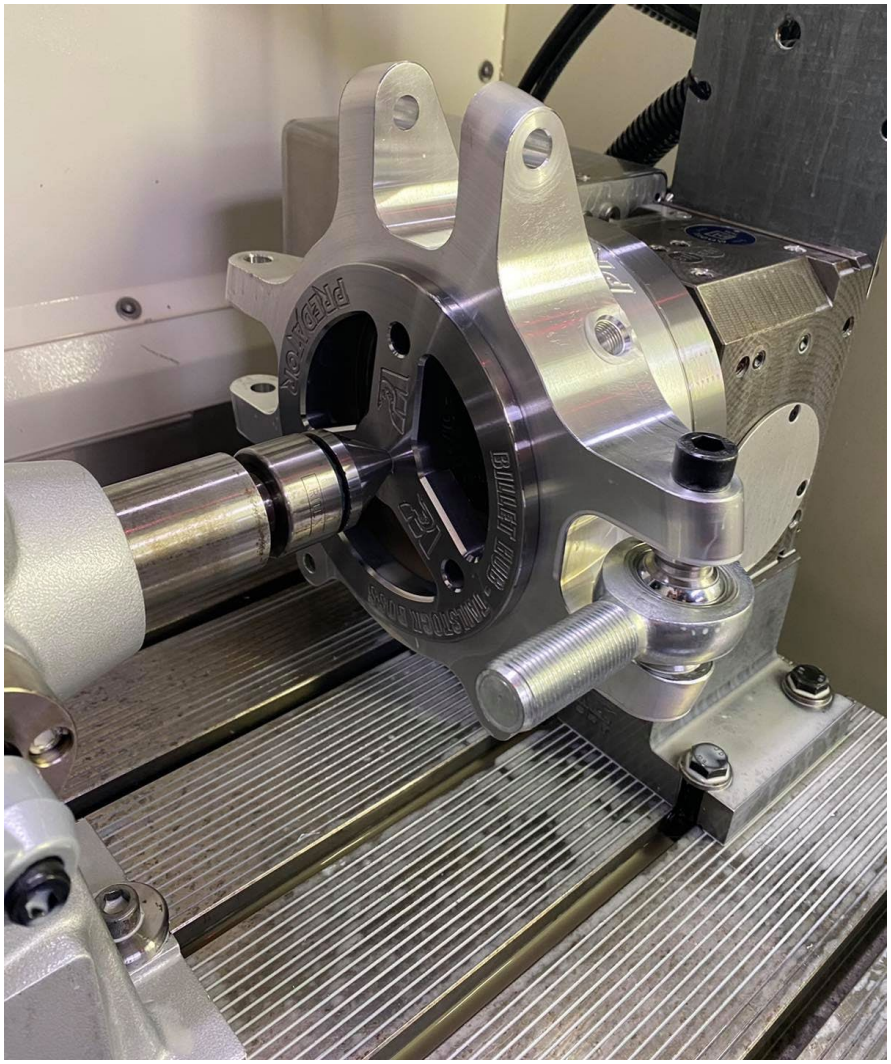

PROFORMANCE MOTORSPORT

PREDATOR

BILLET STEERING RACK – ELECTRIC POWER ASSIST

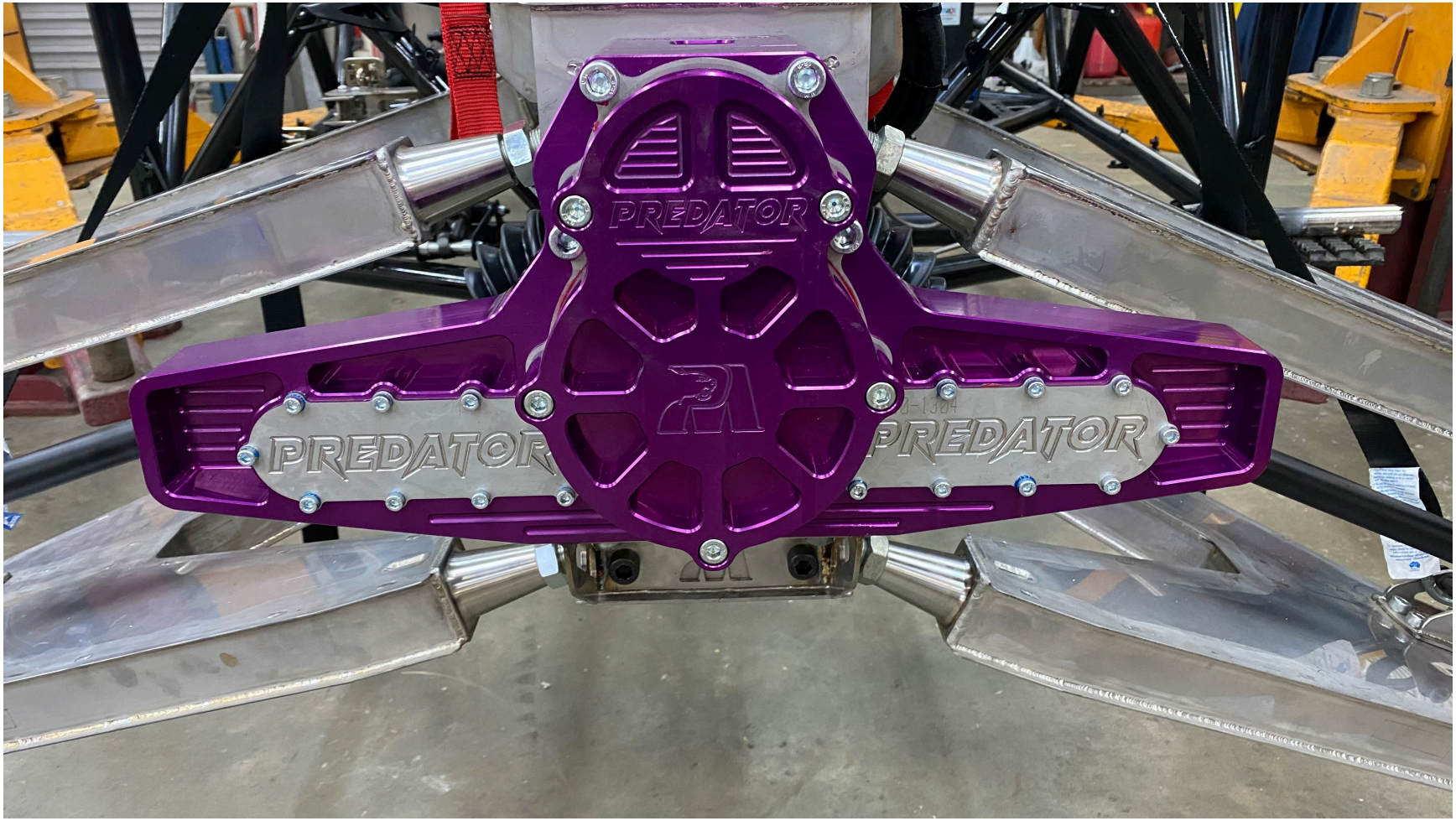

PROFORMANCE MOTORSPORT

PREDATOR

Hydraulic Power Steering (option)

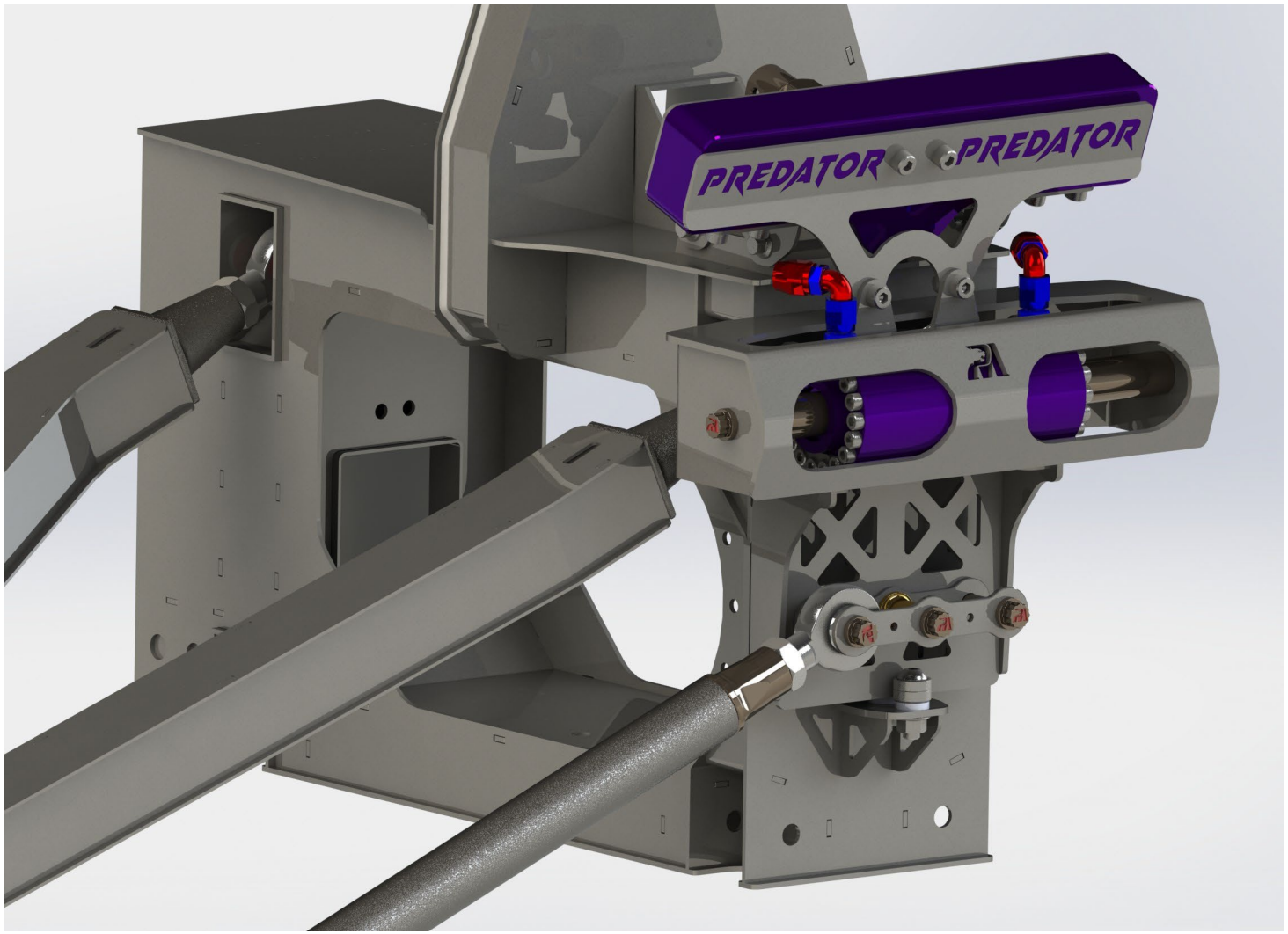

PROFORMANCE MOTORSPORT

PREDATOR

Rapid Response Power Steering System
Ultra High Pressure Pump (Option)

PROFORMANCE MOTORSPORT

PREDATOR

ENGINEERED FOR RACING – NOT MADE IN CHINA

PROFORMANCE MOTORSPORT

PREDATOR

PROFORMANCE MOTORSPORT

PREDATOR

OEM SXS CV vs PREDATOR CV

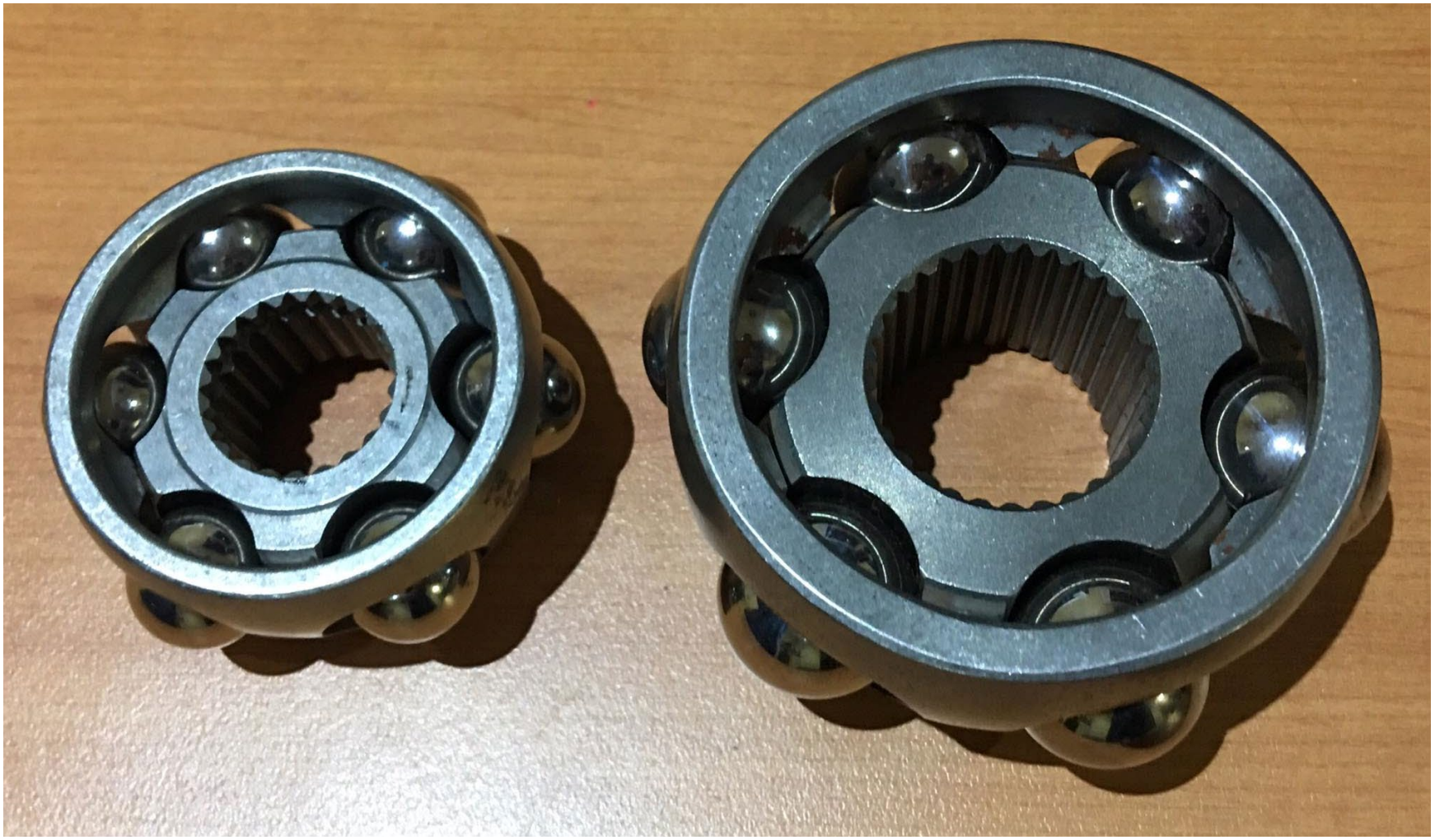

PROFORMANCE MOTORSPORT

PREDATOR

HEAT TREATED CHROME MOLY INTERNAL COMPONENTS

PROFORMANCE MOTORSPORT

PREDATOR

VEHICLE DIMENSIONS

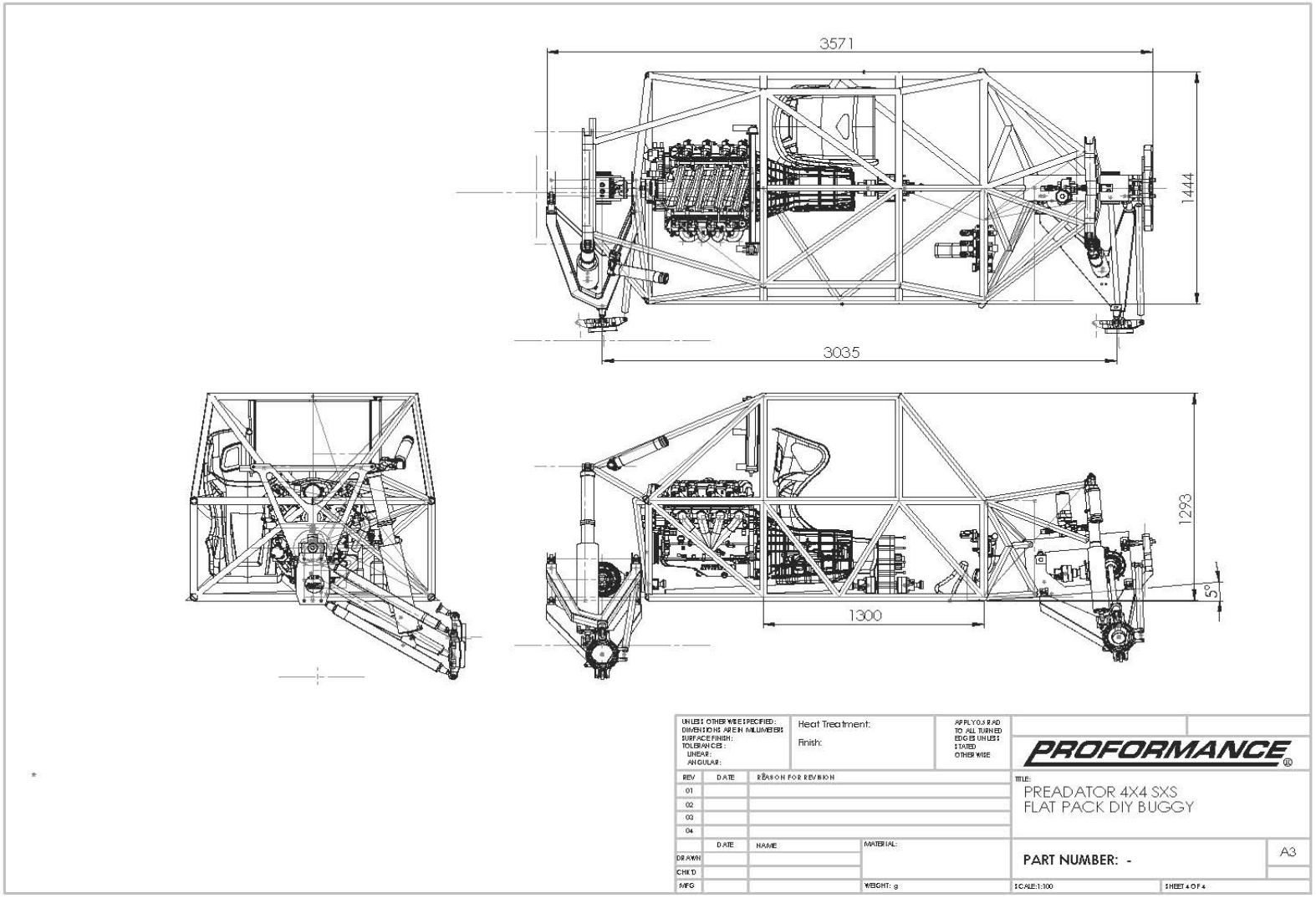

PROFORMANCE MOTORSPORT

PREDATOR

V8 4X4 SXS FLAT PACK KIT - BUDGET PRICING

ITEM	QTY	PRICE	TOTAL
Chassis Tubes Flat Pack (CDS - DOM)	1	$ 6,000	$ 6,000
Chassis Sheet Metal Flat Pack (Arms, Bulkheads, Shock Towers, Sheet Metal)	1	$ 6,000	$ 6,000
Front Diff	1	$ 6,000	$ 6,000
Rear Diff	1	$ 6,000	$ 6,000
Transfer Case (Quick Change)	1	$ 6,500	$ 7,000
Steering Rack (Electric)	1	$ 5,000	$ 5,000
Billet Hubs + Brake Rotors	4	$ 4,000	$ 16,000
		USD	**$ 52,000**
Holinger 6 Speed Sequential Transmission		**USD**	**$ 18,000**

PROFORMANCE MOTORSPORT

PREDATOR

WHAT ELSE DO I NEED?

- Below is a list of other components required to complete your Predator Flat Pack 4X4 Buggy
- Price depends on your budget
  - New or used?
  - *Many components can be obtained from a wrecking yard for budget builds*
  - *You may already have some of these components.*

Engine + Transmission (Lots of options)	Wheels (15x6, 4x156mm) Tires (37x10x15)
Seats - Harnesses	Fuel (Gas) Tank
Radiator/Fan Assembly	EPS (Electric Power Steering) Motor
Electric Brake Booster (Toyota)	28 x FK Rod Ends (RSMX12T)
4 x Wilwood Brake Callipers (120-15374)	3 x Oil Pumps/Coolers
Brake Lines – Oil Lines	4 x Can Am X3 Shocks
Steering Wheel + Uni Joints	2 x Tailshafts with CV's (Propellor Shafts)
Electrical ECU/Harness/Lights	Axles/CV Joints (Proformance, RCV)

PROFORMANCE MOTORSPORT PREDATOR

GLOBAL SALES

- USA CUSTOMERS
  - Turn Key Buggies + Flat Pack Chassis Kits are manufactured by our reseller in USA, Valknut Fabrication - Utah
    - DOM or 4130 Chrome Moly
  - Kits (Chassis, Diffs, Hubs) are shipped from Salt Lake City - Utah USA
  - Shipped to your door in USA
- OTHER COUNTRIES
  - Flat Pack Kits (Chassis, Diffs, Hubs) are shipped from Australia

PROFORMANCE MOTORSPORT

PREDATOR

PROFORMANCE MOTORSPORT

PREDATOR

PROFORMANCE MOTORSPORT

PREDATOR

RACE PROVEN TECHNOLOGY

PROFORMANCE MOTORSPORT

PREDATOR

Additional Information

- Web Page: Predator V8 4X4 SXS
- Video: Ultra Narrow Diffs Explained
- Video: Bearing Technology Explained
- Video: Warning – Counterfeit Chinese Safety Harnesses
- Video: Predator Ultra Narrow Diff
- Video: 4X4 Trophy Truck Testing
- Video: 4X4 Trophy Truck Racing
- Video: Proformance Motorsport Workshop Tour

PROFORMANCE MOTORSPORT PREDATOR

CONTACT INFORMATION

USA DISTRIBUTOR

Valknut Fabrication

Charlie Reynolds
Managing Director
DRAPER SALT LAKE UTAH USA
Ph +1 (310) 529 0155
Email: info@valknutfabrication.com
Website: www.valknutfabrication.com

PROFORMANCE MOTORSPORT

Scott Bryce
Managing Director
1405 Stoneville Road
Mundaring
Western Australia 6073
Ph +61 8 9295 0686
Cell +61 431 624 783
Email: info@proformance.com.au
Website: www.proformance.com.au
Skype: ProformanceMotorsport

PROFORMANCE MOTORSPORT PREDATOR facebook